Lab Work 3 (Part 2)

One-Shots and Oscillators

We will be using the versatile 555 timer as both a monostable multivibrator (one-shot) and an astable multivibrator (oscillator). The internals of a 555 IC is shown below.

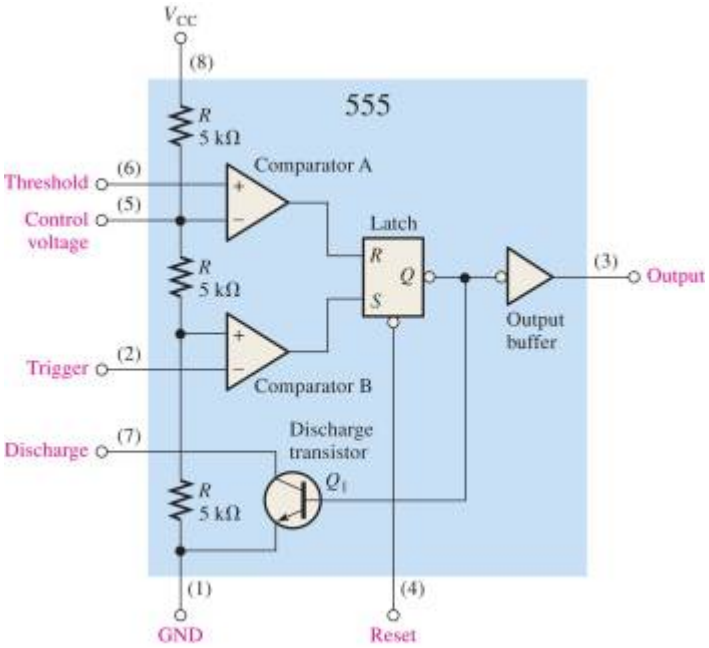

***Disclaimer**: The image above is extracted from resources available for Digital Fundamentals 11th Edition (Global Edition)*

The main internal components of a 555 timer are 2 voltage comparators that are configured by a voltage divider circuit that provides a trigger value of $\frac{1}{3}V_{cc}$ and a threshold value of $\frac{2}{3}V_{cc}$. These values can be externally adjusted using the control voltage pin (5).

555 One-shot Operation

We just need a resistor and a capacitor for this (an extra decoupling capacitor is optional).

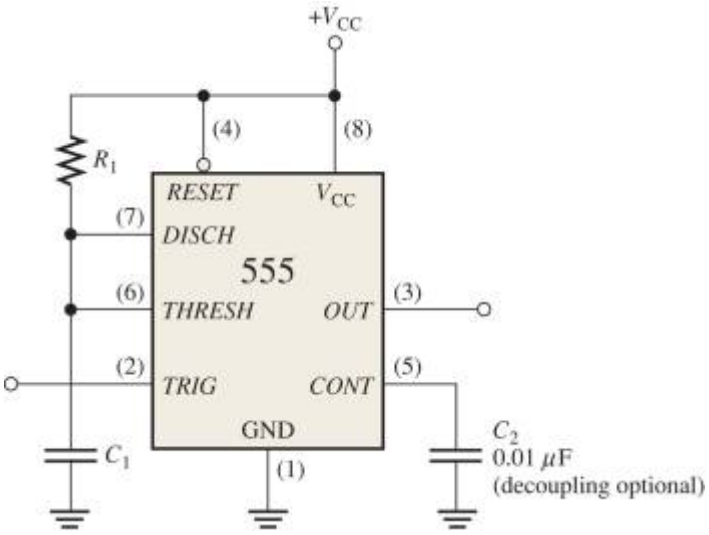

***Disclaimer**: The image above is extracted from resources available for Digital Fundamentals 11th Edition (Global Edition)*

Initially, the circuit will settle down to its stable state.

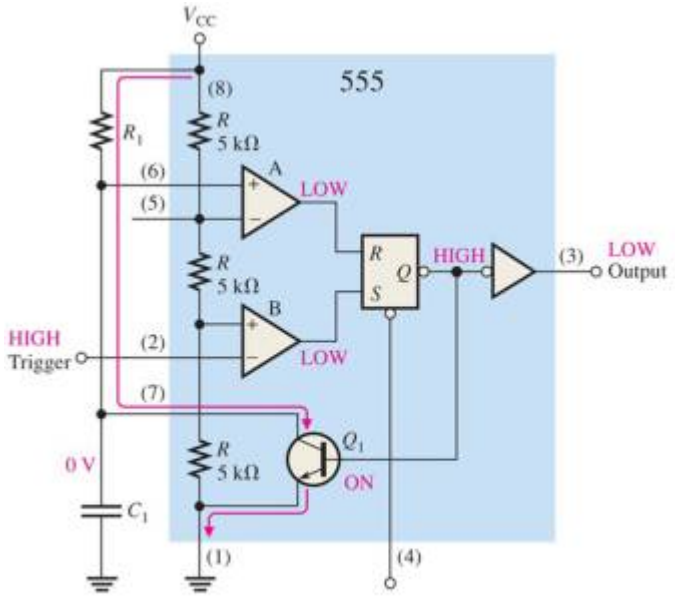

(a) Prior to triggering. (The current path is indicated by the red arrow.)

***Disclaimer**: The image above is extracted from resources available for Digital Fundamentals 11th Edition (Global Edition)*

When triggered, it will set the internal R-S latch, which consequently enables the circuit to charge the capacitor.

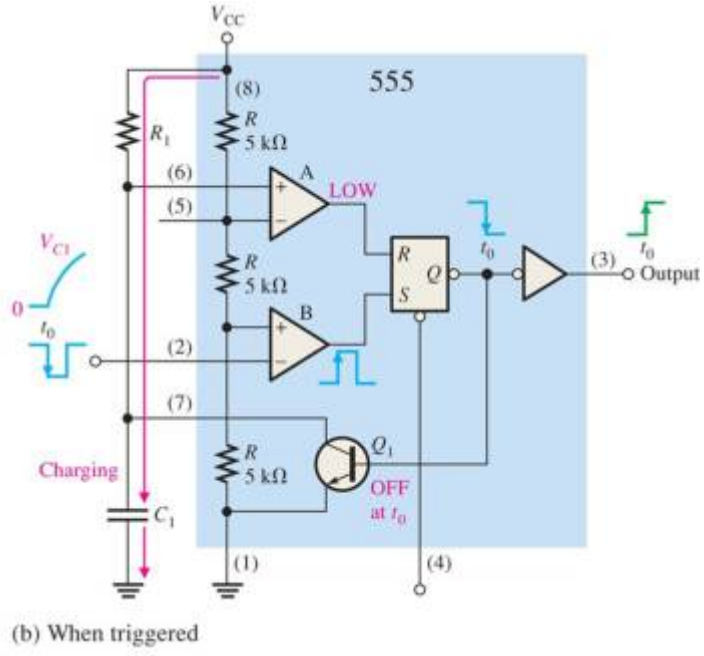

(b) When triggered

***Disclaimer**: The image above is extracted from resources available for Digital Fundamentals 11th Edition (Global Edition)*

Once the capacitor is fully charged (actually, once the voltage is over threshold) and the trigger signal is deasserted, comparator A should cause the latch to reset and consequently cause the discharging of the capacitor.

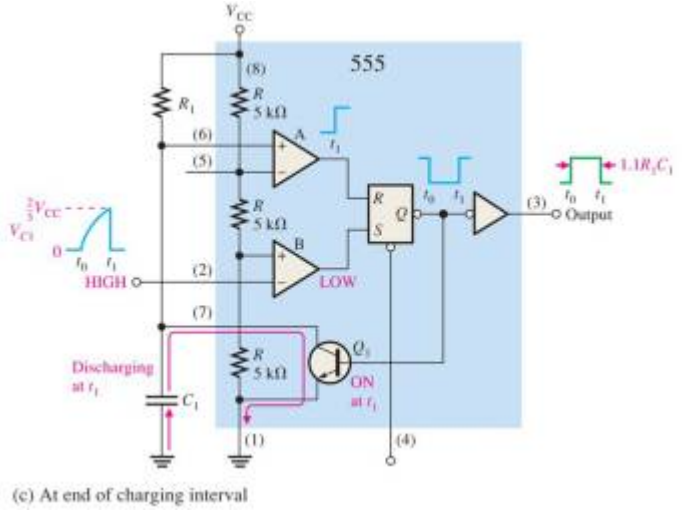

(c) At end of charging interval

***Disclaimer**: The image above is extracted from resources available for Digital Fundamentals 11th Edition (Global Edition)*

Notice that the pulse width generated at the output pin should be around $t_w = 1.1 R_1 C_1$

555 Oscillator Operation

This time we need an extra resistor.

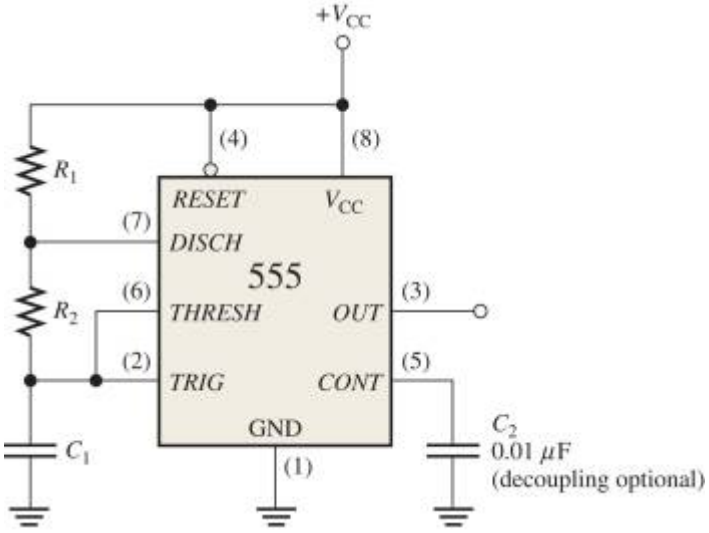

***Disclaimer**: The image above is extracted from resources available for Digital Fundamentals 11th Edition (Global Edition)*

This is how the the oscillator works - the capacitor is charged through the two resistors (R_1 and R_2) when the internal transistor Q_1 is off, and discharged through R_2 when transistor Q_1 is on.

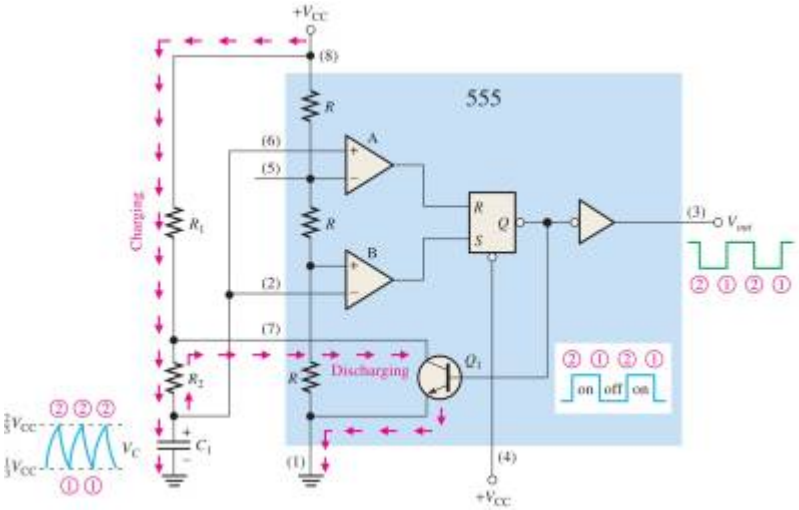

***Disclaimer**: The image above is extracted from resources available for Digital Fundamentals 11th Edition (Global Edition)*

The frequency of the generated signal at the output pin should be $f=\frac{1.44}{\left(R_1+2R_2\right)C_1}$. The time that the output is at V_{CC} should be $t_H=0.7\left(R_1+R_2\right)C_1$, while the time for the output to be at GND should be $t_L=0.7R_2C_1$. Thus, the duty cycle is given by $\left(\frac{R_1+R_2}{RI+2R_2}\right)100\%$.

To get a duty cycle of less than 50%, we need a diode in order to bypass R_2 when charging the capacitor.

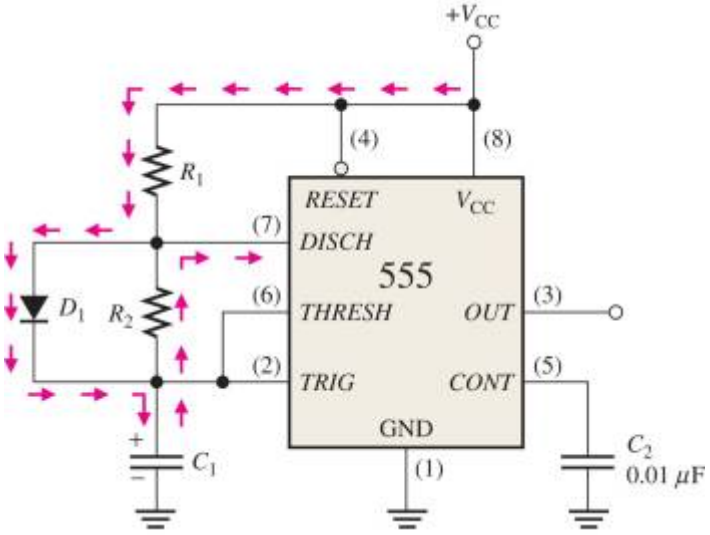

***Disclaimer**: The image above is extracted from resources available for Digital Fundamentals 11th Edition (Global Edition)*

Thus, the duty cycle is now given by $\left(\frac{R_1}{RI+R_2}\right)100\%$.

Things To Do

THING1 Build a one-shot circuit that produces 1ms pulse. Determine a suitable R & C values. Verify.

THING2 Build an oscillator circuit that produces 1kHz (50% duty cycle) square-wave signal. Verify.

THING3 (Optional) Build an oscillator circuit that produces 50Hz signal, and $t_H = 1ms$. Verify.

From:
https://azman.my1matrix.cc/ - **Azman @MY1**

Permanent link:
https://azman.my1matrix.cc/doku.php?id=archive:pgt104lab02b

Last update: **2026/02/08 03:46**