Microcontroller Boards

Useful information.

ESP32 DEVKIT

Espressif's ESP32 - got this board to play around with...

esp32_devkit1.txt

```
--------------
ESP32-DEVKITV1
--------------

- clone of DOIT's ESP32 DEVKIT V1?
- ESP-WROOM-32 (ESP32-D0WDQ6)
  = ESP32-D0WD-based modules with integrated flash
- DECISION20200822:
  = toolchain and build environment is simply not worth it!
  = WILL USE micropython instead!

-----------
micropython
-----------

- get some tools
  > pip install esptool rshell
- download binary from https://micropython.org/download/esp32/
  = selected esp32-idf3-20191220-v1.12.bin
  = idf4 seems to be missing LAN? stick with idf3 for now...
- erase flash
  > esptool.py --chip esp32 --port /dev/ttyUSB0 erase_flash
- flash micropython
  > esptool.py --chip esp32 --port /dev/ttyUSB0 --baud 460800
write_flash -z 0x1000 <bin>
- use rshell to manage code (vfs)
  > rshell --port /dev/ttyUSB0 --buffer-size=32
- download file in rshell
  > cp <file> /pyboard[/<more_path>]

----------
board info
----------

esp32 doit devkit v1
vid = 0x10c4
pid = 0xea60
```

```
sn = 0001

esp32 doit devkit v1 (aliexpress - usb type c)
vid = 0x1a86
pid = 0x7523
sn = (null)
```

Decided to use micropython. Pinouts shown below (*Disclaimer: Image copied from RandomNerdTutorials*).

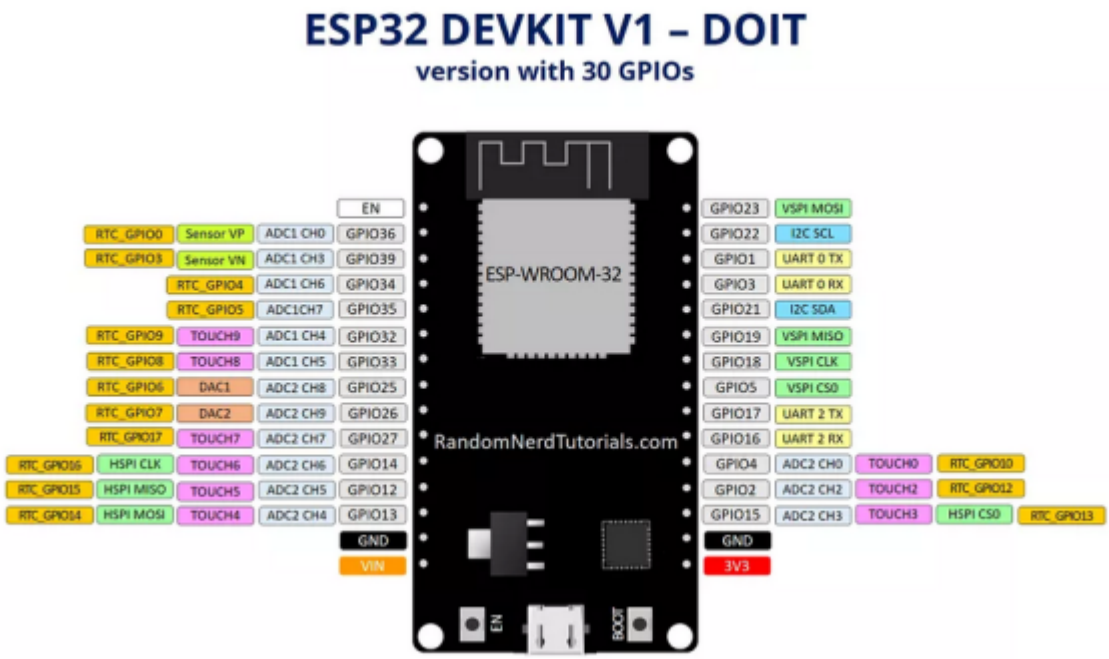

(*Disclaimer: Sorry, I can't remember where I got the following two from...*).

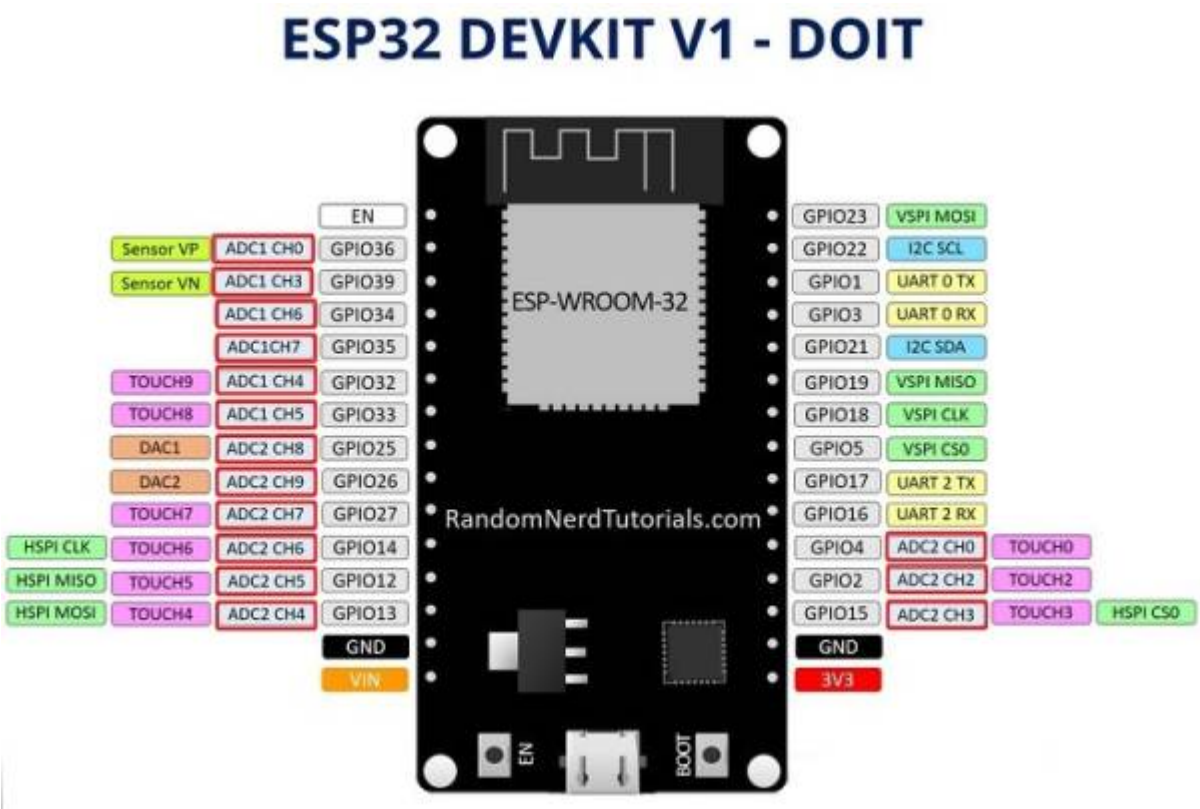

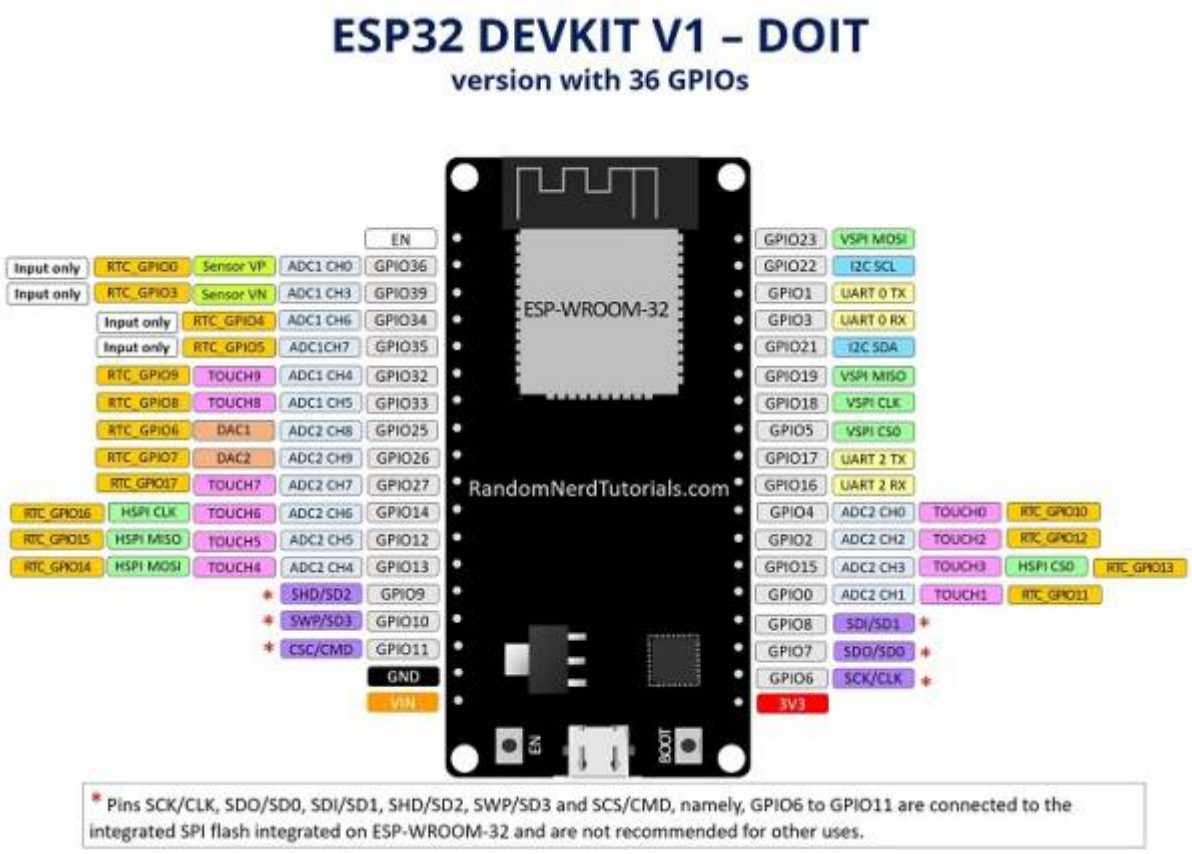

Below is a simple python script to test SSD1306 OLED display which makes use of this micropython library code.

test.py

```
from machine import Pin, I2C
from ssd1306 import SSD1306_I2C
from time import sleep

def run_this():
  i2c = I2C(-1, scl=Pin(22), sda=Pin(21))
  oled_width = 128
  oled_height = 64
  oled = SSD1306_I2C(oled_width, oled_height, i2c)

  oled.text('Hello, World 1!', 0, 0)
  oled.text('Hello, World 2!', 0, 10)
  oled.text('Hello, World 3!', 0, 20)
  oled.show()
```

Using Arduino IDE:

- select `Preferences>Additional Board Manager URLs`
- enter `https://espressif.github.io/arduino-esp32/package_esp32_index.json`
- open `Boards Manager` and install esp32 (search for it)
- when selecting board for upload, select `DOIT ESP32 DEVKIT V1`

Note: esp32 flash tool requires python serial module (e.g. `pip install pyserial`)

ESP01S WiFi Module

Actually has an esp8266 controller (can be a standalone... e.g. NodeMCU). I primarily use this as WiFi module for 8051 systems.

esp01s_info.txt

```
Upgraded ESP-01S ESP8266 Serial WIFI Wireless Module Wireless
Transceiver
- ESP01S ESP8266-01S (stronger antenna signal compared to esp01)
- 1MB flash (from 512M)
- Integrated WEP, TKIP, AES, and WAPI engines. 802.11 b/g/n
- Wake up and transmit packets in 2ms
- standby power consumption of 1.0mW (DTIM3)

Feature:
- Power down leakage current <10uA
- Integrated low power 32-bit CPU could be used as application
processor

------
|ANT.|
|    |
|    |
|8765|
|1234|
------

1|tx|
2|ch_pd|1-enable
3|rst|0-reset
4|vcc|3.3v
5|rx|
6|gpio0|0-flash mode (def), 1-uart mode (prog)
7|gpio2|gpio
8|gnd|
```

Seeed Studio's XIAO SAMD21

Based on SAMD21 (Cortex-M0)

***Note**: Arduino IDE Board Setup (https://files.seeedstudio.com/arduino/package_seeeduino_boards_index.json)*

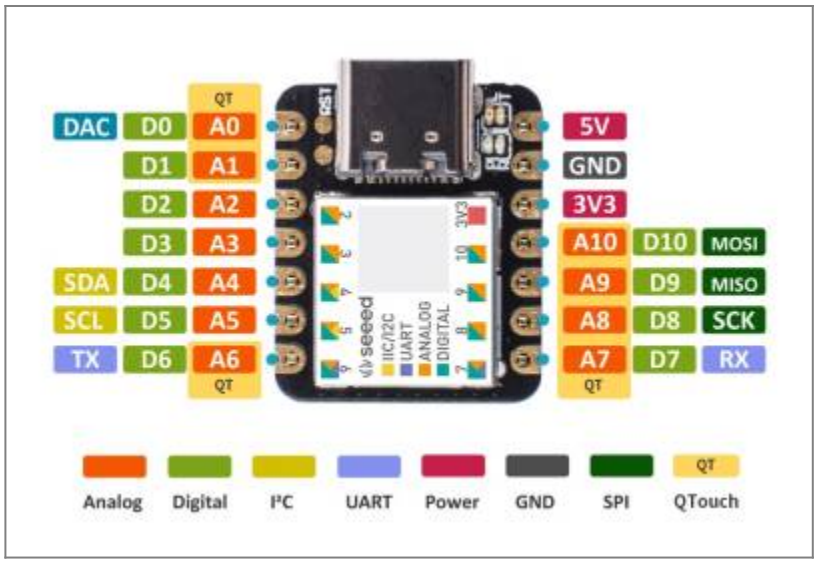

Pinouts shown below (*Disclaimer: Image copied from some online page.*).

Seeed Studio's XIAO ESP32-C3

Using ESP32 core (?duh!)

***Note**: Arduino IDE Board Setup (Espressif's https://espressif.github.io/arduino-esp32/package_esp32_index.json)*

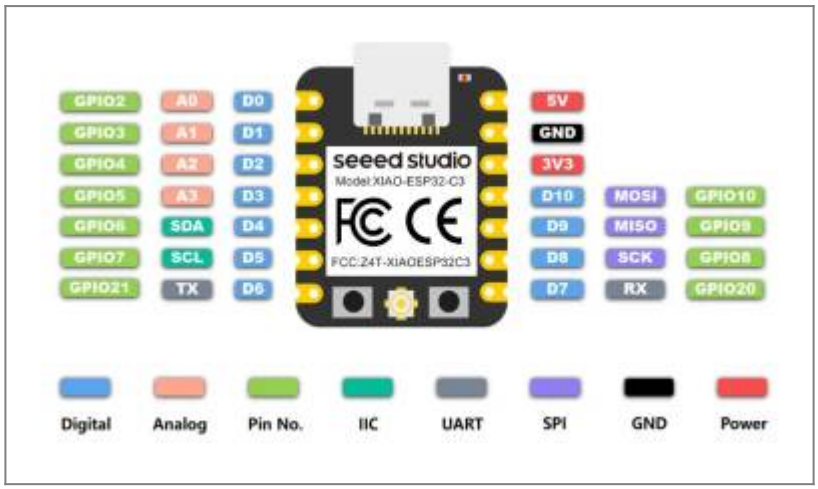

Pinouts shown above (*Disclaimer: Image copied from some online page.*).

From:
https://azman.my1matrix.cc/ - **Azman @MY1**

Permanent link:
https://azman.my1matrix.cc/doku.php?id=notes:devs:board&rev=1777080118

Last update: **2026/04/25 01:21**